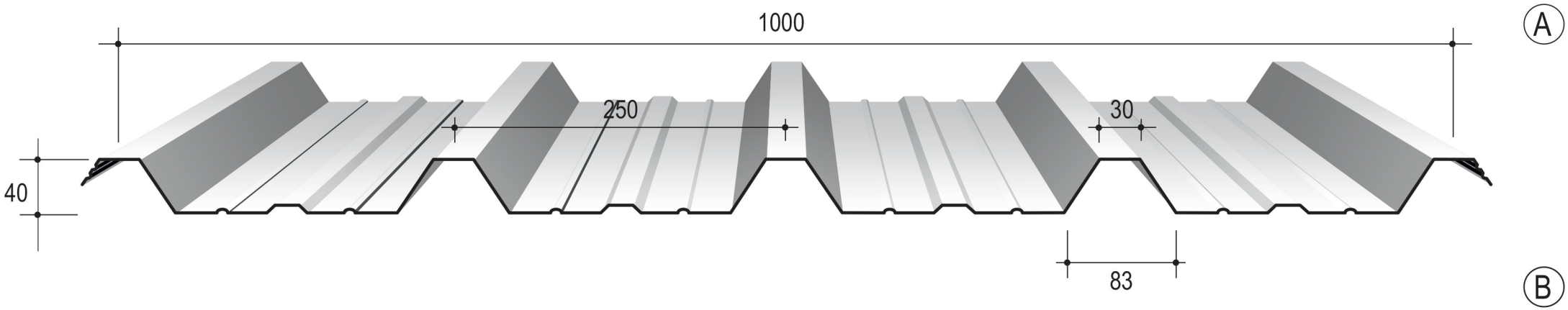
1000
A
250
30
40
83
B